SJSS-Series Sanitary Swivels

316L STAINLESS STEEL SWIVELS

Ideal for the prevention of hose line kinking, twisting and stretching, the Dixon SJSS-series swivel joint provides smooth movement and reliable performance. This easy to connect, easy to clean swivel is configurable to a wide range of orientations suitable for your specific application.

Applications
- Anywhere hoses are used for the smooth transfer of product
- Transition of flow paths on a flow plate

Sizes
- Diameters 1", 1-1/2", 2", 2-1/2", 3", and 4"

Features
- Long inner body for easy repair kit insertion
- Large chamfer for rapid, smooth assembly
- Dixon wingnut for better grip
- Added bushing on 4" model reduces torque
- 3A Certified COP

Materials
- 316L stainless steel
- Silicone or EPDM gaskets

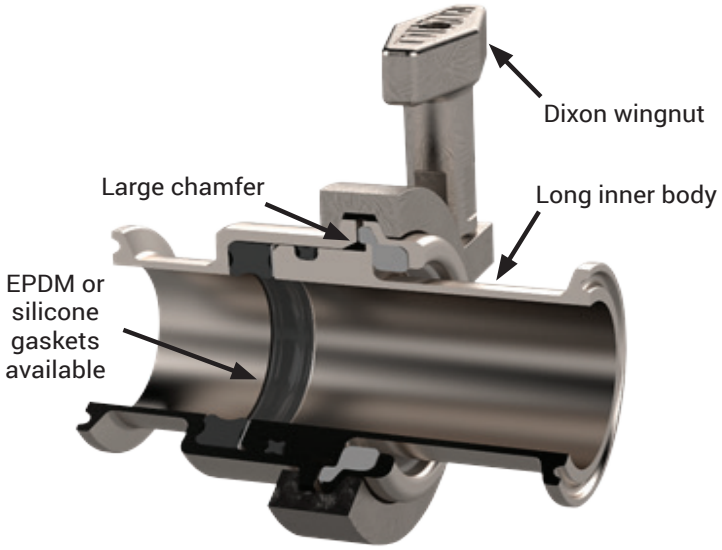

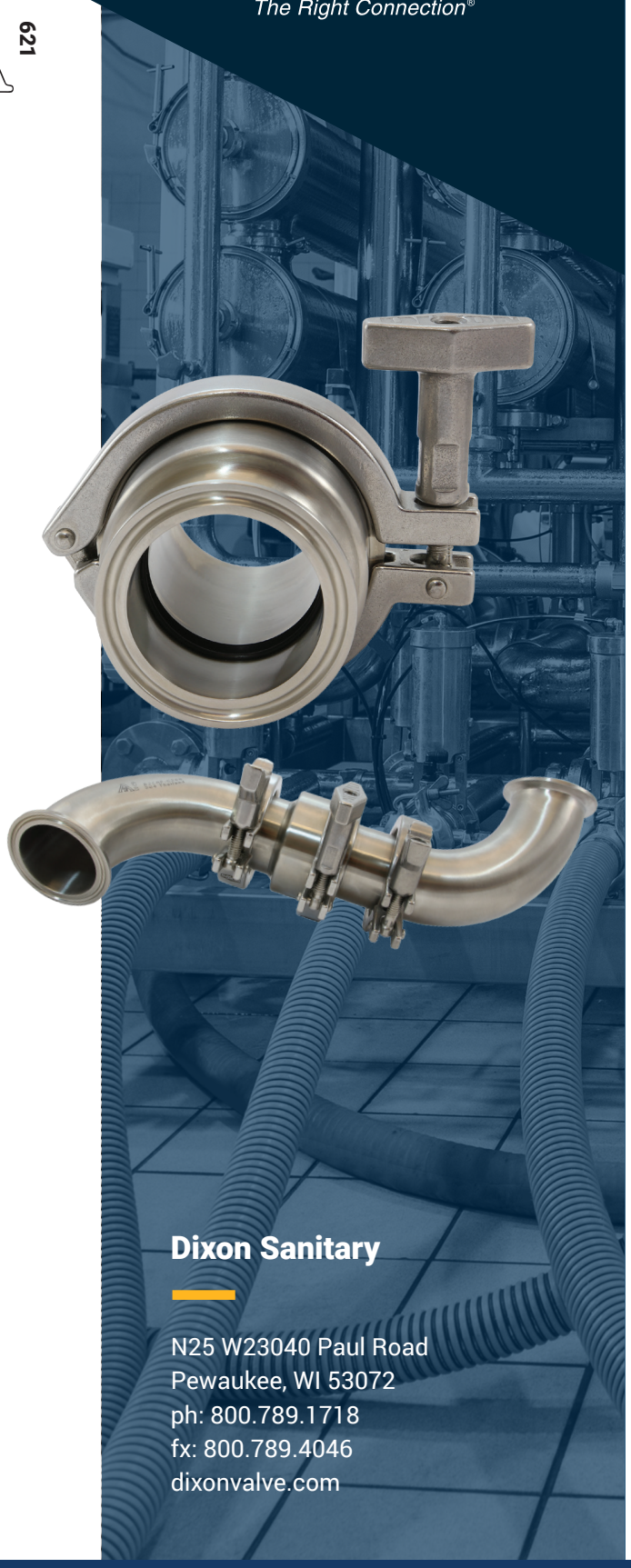

Dixon Sanitary

N25 W23040 Paul Road
Pewaukee, WI 53072
ph: 800.789.1718
fx: 800.789.4046
dixonvalve.com

Sanitary Swivel

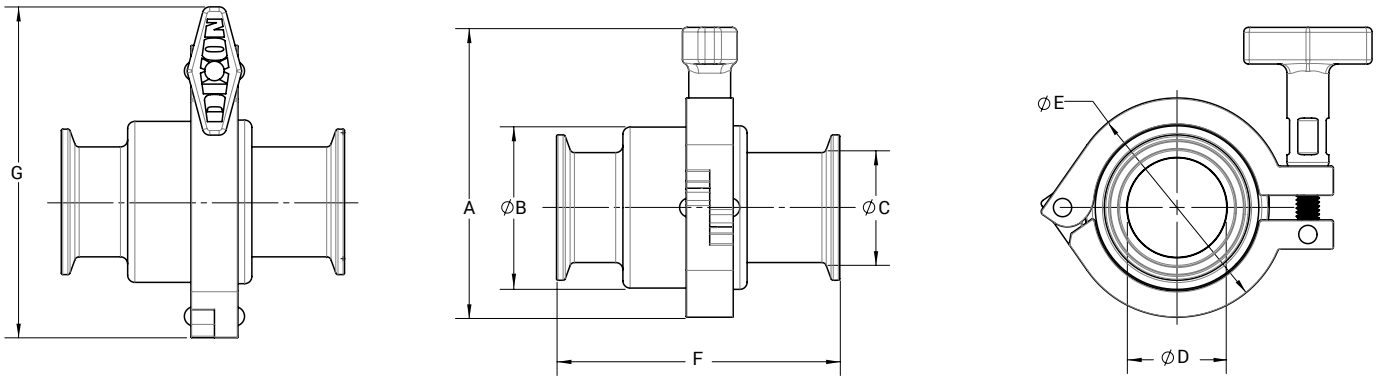

SJSS-Series Sanitary Swivel Dimensions

Size	A (in)	B (in)	C (in)	D (in)	E (in)	F (clamp) (in)	F (weld) (in)	G (in)
1″	3.56	1.68	1.00	.087	2.42	3.87	2.24	3.93
1-1/2″	3.96	2.20	1.50	1.37	2.99	3.87	2.24	4.52
2″	4.14	2.71	2.00	1.87	3.48	3.84	2.22	5.09
2-1/2″	4.48	3.23	2.50	2.37	3.98	3.84	2.22	5.57
3″	5.08	4.26	3.00	2.87	5.08	3.84	2.22	6.82
4″	7.03	5.31	4.00	3.83	7.03	4.97	3.22	9.20

Style Guide

Style 20

Style 30

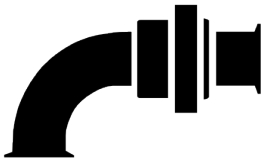

Style 40

Style 50

Style 60

Style 70

SJSS Repair Kits*

Size	Silicone Part #	EPDM Part #
1	SJSS-REPAR-S100	SJSS-REPAR-E100
1-1/2″	SJSS-REPAR-S150	SJSS-REPAR-E150
2″	SJSS-REPAR-S200	SJSS-REPAR-E200
2-1/2″	SJSS-REPAR-S200	SJSS-REPAR-E250
3″	SJSS-REPAR-S300	SJSS-REPAR-E300
4″	SJSS-REPAR-S400	SJSS-REPAR-E400

*Repair kits include: 1- inner body gasket and 1- outer body gasket in choosen material, 1- PTFE upper body seat and 1- PTFE lower body washer.

© 2021 DVCC • DS-SJSS_0921